FIRE BY escea.

Installation Instructions and User Guide

For the latest documentation, visit www.escea.com or www.escea.com.au

WARNING
THE APPLIANCE SHALL BE INSTALLED IN ACCORDANCE WITH:
- **THIS INSTALLATION INSTRUCTION BOOKLET**
- **LOCAL / NATIONAL BUILDING CODES**
- **ANY OTHER RELEVANT STATUTORY REGULATIONS**

LEAVE THESE INSTRUCTIONS WITH THE END USER.

Warranty Repair and Annual Servicing
Warranty repair work must be carried out by a suitably qualified person.

Any shortcomings in the appliance will be the responsibility of the installer. Escea will not be accountable for any such failings or their consequences.

Manufactured by: Escea Ltd, PO Box 5277 Dunedin NZ, Ph: +64 3 478 8220

For contact details of your local Escea distributor or dealer, please visit www.escea.com, call 0800 173 000, or email us at info@escea.com.

From Australia, please visit www.escea.com.au, call AU: 1800 460 832 or WA: 1800 730 140, or email us at info@escea.com

WARNING

FAILURE TO FOLLOW THESE INSTRUCTIONS COULD RESULT IN DEATH, SERIOUS BODILY INJURY, AND/OR PROPERTY DAMAGE. FAILURE TO FOLLOW THESE INSTRUCTIONS MAY ALSO VOID YOUR FIRE INSURANCE AND/OR WARRANTY.

A LIT FIRE MUST NEVER BE LEFT UNATTENDED.

THE FIRE TABLE MUST ONLY BE USED FOR COOKING/HEATING AS INTENDED.

MAINTAIN AND OPERATE THE FIRE TABLE IN ACCORDANCE WITH THESE INSTRUCTIONS.

DO NOT USE FLAMMABLE LIQUIDS OR AEROSOLS TO START OR REKINDLE A FIRE.

DO NOT PLACE ANY COMBUSTIBLES TOO CLOSE TO THE FIRE AS SOME FIREWOOD MAY SPIT SPARKS.

DO NOT TOUCH THE SURFACES AS THEY CAN BE VERY HOT EVEN AFTER THE FIRE HAS BURNT OUT.

ENSURE CORRECT INSTALLATION AS PER THESE INSTRUCTIONS.

DO NOT MODIFY THE FIRE.

YOUNG CHILDREN SHOULD BE CAREFULLY SUPERVISED WHEN THEY ARE IN THE SAME AREA AS THE FIRE TABLE.

TODDLERS, YOUNG CHILDREN, AND OTHERS MAY BE SUSCEPTIBLE TO ACCIDENTAL CONTACT BURNS AND MUST NOT OPERATE THE COOKING FIRE.

A PHYSICAL BARRIER IS RECOMMENDED IF THERE ARE "AT RISK" INDIVIDUALS IN THE VICINITY. TO RESTRICT ACCESS TO A FIREPLACE OR STOVE, INSTALL AN ADJUSTABLE SAFETY GATE TO KEEP TODDLERS, YOUNG CHILDREN, AND OTHER "AT RISK" INDIVIDUALS OUT OF THE AREA AND AWAY FROM HOT SURFACES.

TAKE CARE WHEN INSTALLING TO PREVENT INJURY AS THIS PRODUCT IS HEAVY.

IMPROPER DISPOSAL OF ASHES MAY RESULT IN FIRES.

CRACKED, BROKEN, EXTENSIVELY CORRODED OR BUCKLED COMPONENTS MAY RENDER THE INSTALLATION UNSAFE.

DO NOT OVER FIRE THE APPLIANCE - FOLLOW FIRE LOADING GUIDELINES.

DO NOT STORE CHEMICALS OR FLAMMABLE MATERIALS NEAR THIS APPLIANCE.

DO NOT SPRAY AEROSOLS NEAR THIS APPLIANCE.

DO NOT SIT ON OR PLACE HEAVY OBJECTS ON THE EDGE OF THE FIRE TABLE AS IT MAY TIP.

ONLY TO BE USED OUTDOORS - ENSURE THERE ARE NO OVERHEAD PROJECTIONS.

DO NOT USE IN HIGH WINDS.

OBSERVE ALL LOCAL FIRE BAN NOTICES.

FOLLOW HYGIENIC FOOD PREPARATION AND COOKING GUIDELINES.

A	**Installation Process and Product Details**	**5**
A1	Product Description	5
A2	Product Dimensions	5
B	**Safety Clearances to Combustibles**	**6**
B1	Clearances to Combustible Surfaces	6
C	**Assembling and Installing the Fireplace**	**7**
C1	Installation Location	7
C2	Platform Minimum Requirements	7
C3	Placing the Appliance	8
C4	Using the Weather Cover	9
D	**Burning Guide**	**10**
D1	Fuel Selection	10
D2	Starting the Fire	10
D3	Loading the Fire	10
D4	Extinguishing the Fire	10
E	**Cooking Guide**	**11**
E1	Optimal Cooking Setup	11
E2	Cooking Grill Instructions	11
E3	Placing the Cooking Grill	11
E4	Using the Kebab Holder	12
F	**Maintenance**	**13**
F1	Recommended Refurbishment Products	13
F2	Data Plate Location	13
G	**General Warranty Terms and Conditions**	**14**

A Installation Process and Product Details

A1 Product Description

The EP1350 is an outdoor fire table with the ability to transform seamlessly from a cooking appliance into a fire table. It is a freestanding structure that is not to be installed into a cavity.

It is designed for outdoor use ONLY.

A2 Product Dimensions

For more detail, view architectural drawings at www.escea.com or www.escea.com.au.

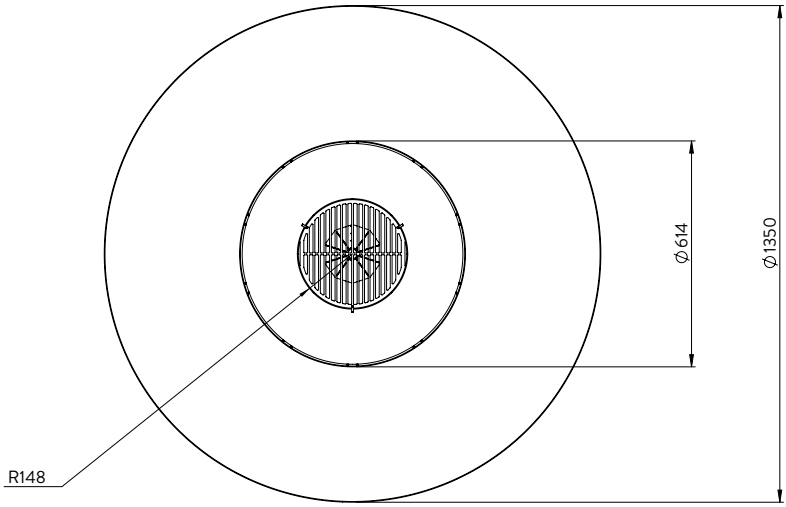

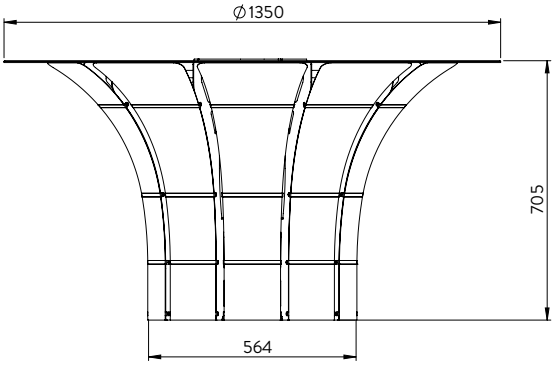

WEIGHT: 110KG

B Safety Clearances to Combustibles

B1 Clearances to Combustible Surfaces

The EP1350 outdoor fire table is installed as a freestanding structure. The following clearances to combustible materials must be maintained to ensure safe operation.

Warning: Never hang any combustible materials on, above, or around the fireplace.

Always ensure that this product is installed to comply with all local and national building codes.

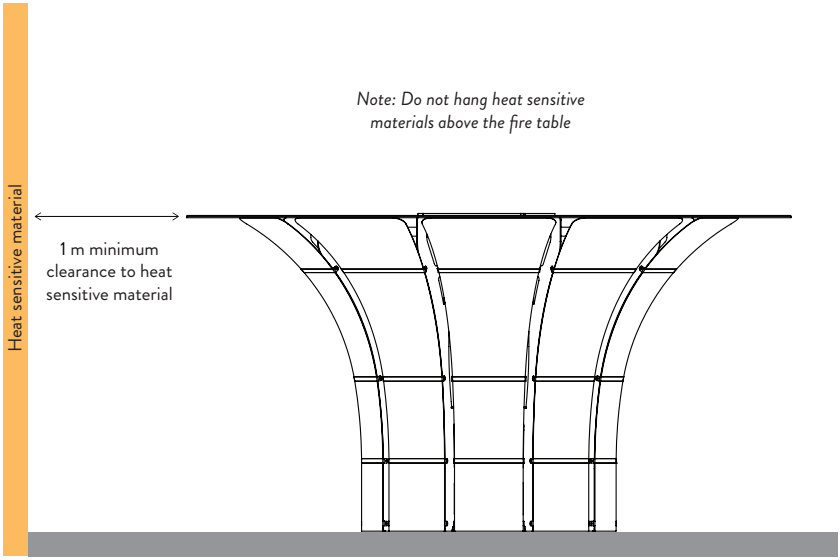

Note: Do not place the EP1350 Fire table near or under any overhanging roof structure.

C Assembling and Installing the Fireplace

C1 Installation Location

The EP1350 is an outdoor fire table that is installed as a freestanding structure. Locate the fire away from windy areas for best performance.

C2 Platform Minimum Requirements

The platform should be stable, level, and suitable to support the weight of the fire table.

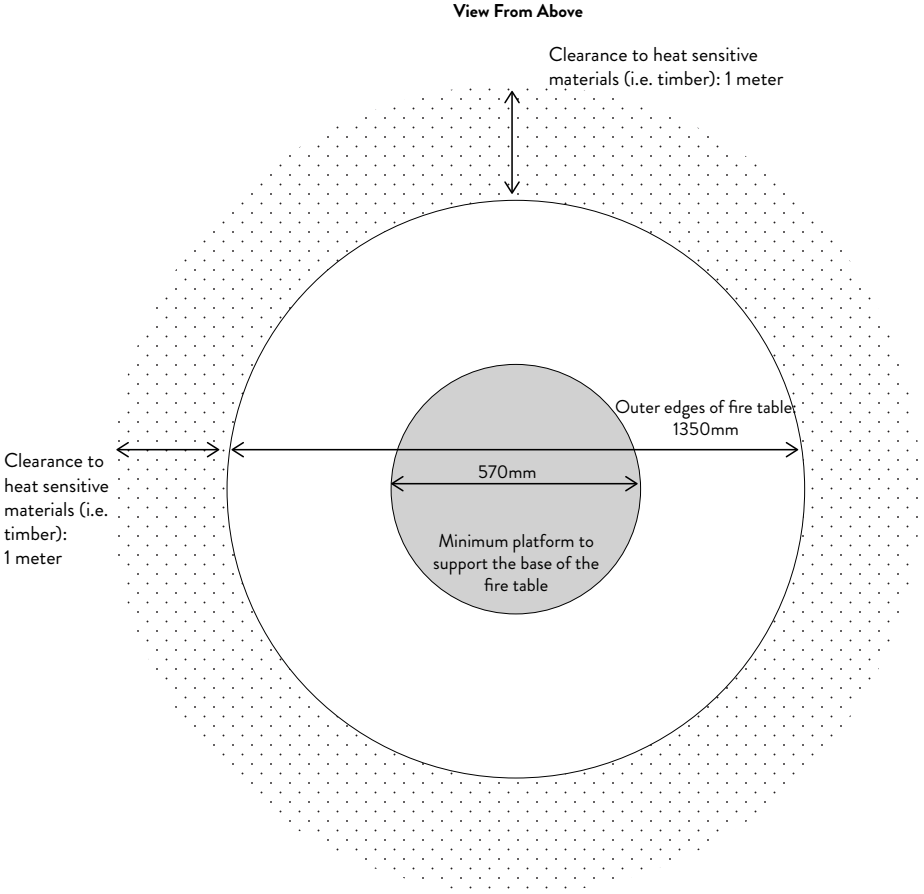

The EP1350 fire table can be installed onto a timber deck if a non-combustible material is used directly under the base of the fire (570mm diameter minimum) to protect the timber from falling embers.

C3 Placing the Appliance

To access the fixing holes on the fire table, the four components shown below need to be removed. The fire table should be bolted to the ground using at least 4 of the 10 fixing points on the bottom of the fire. 6.5mm x 50 hex head screw-bolts are recommended.

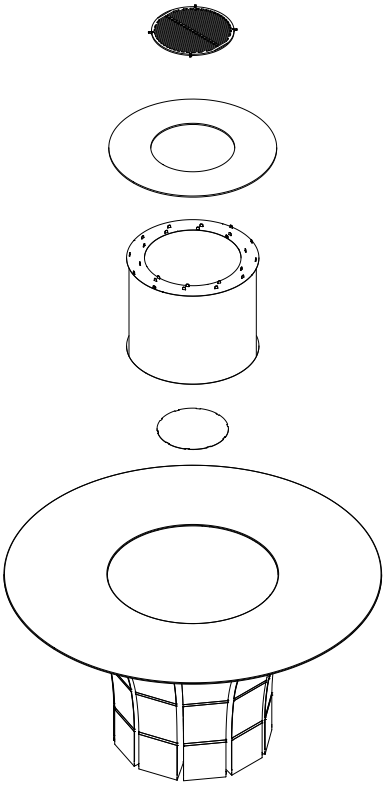

WARNING! Do not sit on the edge of the fire table. Do not allow children to hang off of the fire table.

NOTE: If unsecured, the fire table may tip if more than 50kg is placed on the outer edge.

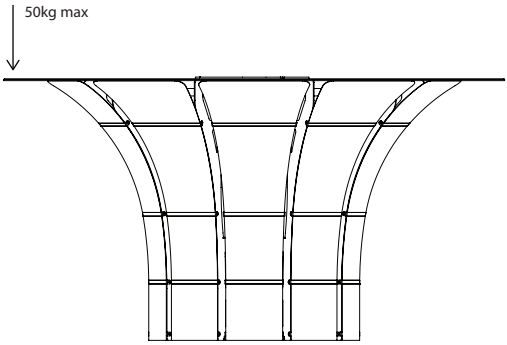

C4 Using the Weather Cover

Ensure that any fire is extinguished and the fire table is cool prior to fitting the weather cover.

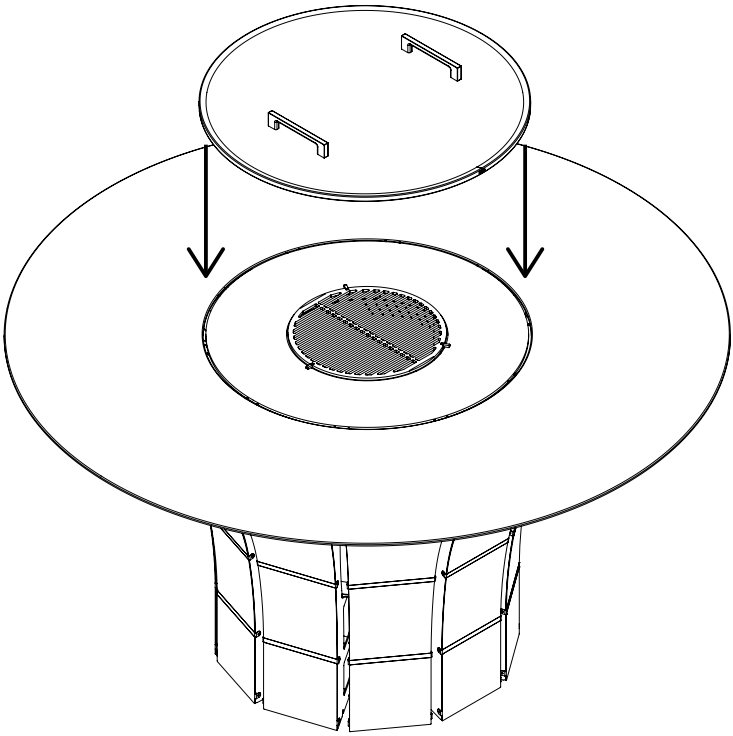

D Burning Guide

D1 Fuel Selection

Only use dry firewood (less than 20% moisture content) or charcoal in the fire.

D2 Starting the Fire

If the fire is to be started for cooking, please proceed to section E.

To start the fire, stack kindling (less than 30mm cross section) around the pyramid, allowing sufficient airflow between pieces. The use of fire-starters is recommended.

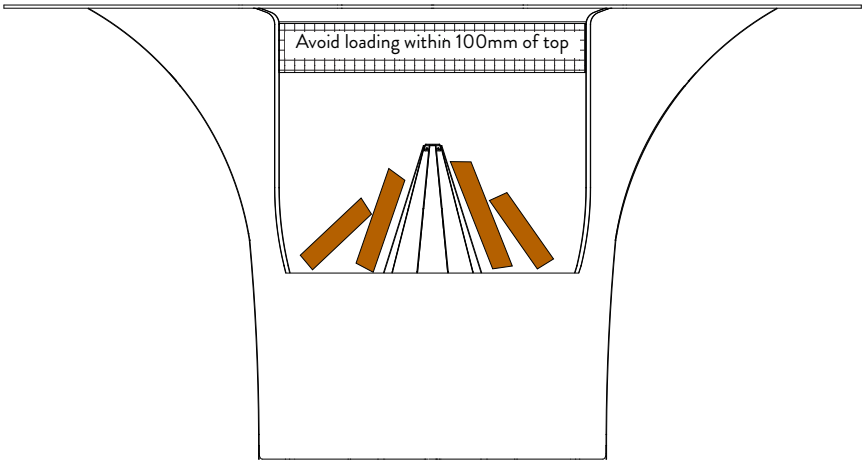

Note: Expansion/contraction noises during heating up and cooling down cycles are normal and to be expected.

D3 Loading the Fire

Once an ember bed has been established, start to load larger pieces of firewood until the desired temperature or look has been achieved.

Do not overload the fire (see maximum load noted in the image above).

D4 Extinguishing the Fire

Allow all remaining wood pieces to burn down to embers. Prior to leaving the fire unsupervised, remove large embers from the fire table and place them in a fireproof pail. Soak them well. Store and dispose of them safely. It is recommended to leave approximately 20mm of ash in the bottom of the fire table.

Note: The inside of the fire table will remain warm for several hours after the embers have been removed. Use caution when touching any parts of the fire table and supervise small children until the firebox has cooled completely.

E Cooking Guide

E1 Optimal Cooking Setup

Start the fire using charcoal; use lighter fluid or a chimney starter to get the charcoal burning. Continue adding charcoal to the fire until the desired cooking temperature is reached.

E2 Cooking Grill Instructions

Ensure that the provided cooking grill is securely seated prior to cooking.

The grill and the inner cooking ring can be removed and cleaned in the kitchen with a cloth and regular dish detergent.

E3 Placing the Cooking Grill

Begin by positioning the cooking grill above the fire. Use the provided handle to position or move the cooking grill.

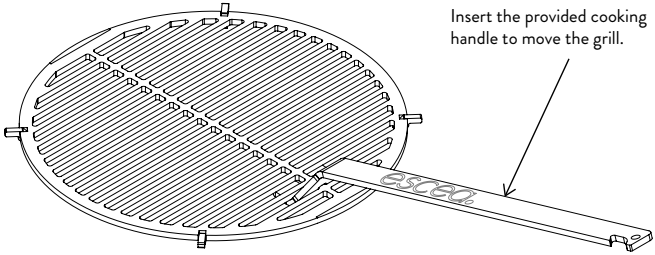

To heat the grill, place it over the burning charcoal. To maintain heat, occasionally lift the cooking grill to add more charcoal as required. The metal plate surrounding the cooking grill can also be used for cooking (shaded grey below).

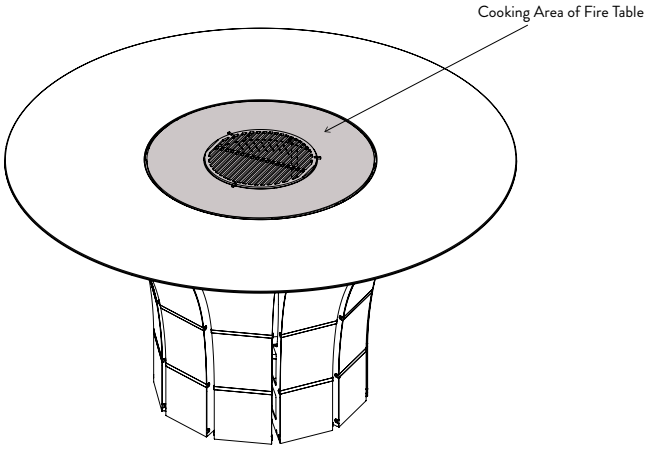

Place damp wood chips (i.e. cedar, hickory, etc.) directly into the fire to provide a smoky flavour to the cooking food.

Once you have finished cooking, remove the cooking tray prior to using the fire for standard outdoor heating.

E4 Using the Kebab Holder

The fire table has been supplied with a set of kebabs and a kebab holder accessory for cooking. Rotate the kebab sticks occasionally to ensure even cooking.

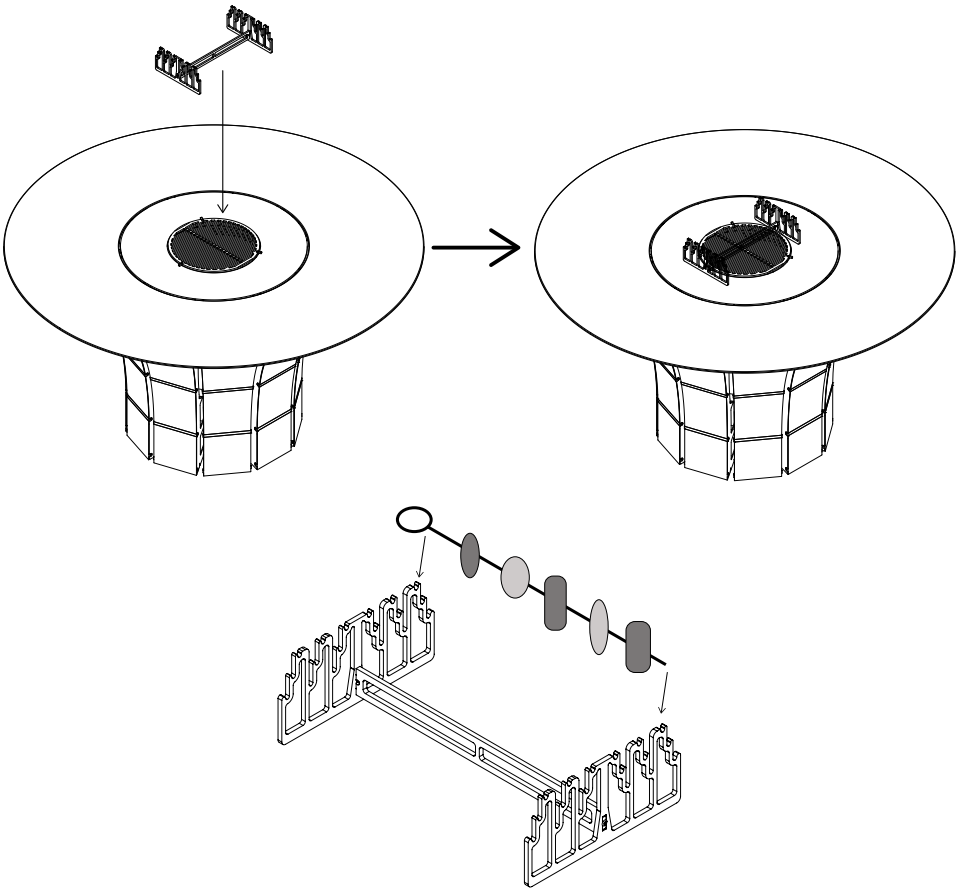

F Maintenance

F1 Recommended Refurbishment Products

Stainless Steel Cooking Surfaces
The cooking surfaces of the fire can be removed and washed with a cloth and standard dish-washing liquid. The centre cooking grill can be scrubbed with steel wool to remove any food debris or corrosion.

Powder-coated Surfaces (including outer ring)
To clean all powder coated surfaces in the fire, including the outer ring of the fire, wipe gently with warm soapy water and a damp cloth. Excessive rubbing may mark the powder coated surface.

F2 Data Plate Location

The serial number is located on the data plate, shown in the diagram below. To access the data plate, lift the two cooking grills.

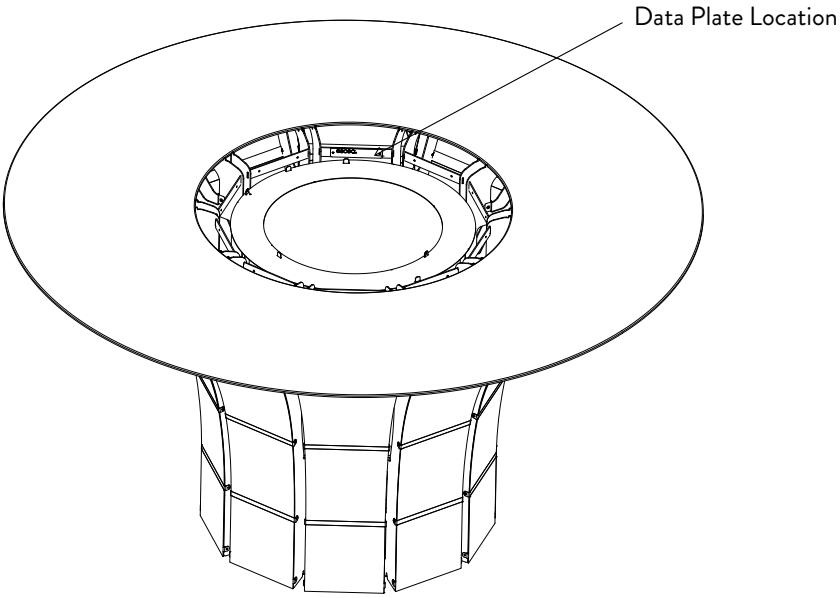

G General Warranty Terms and Conditions

General Information

This quality manufactured product is state of the art. The materials used were meticulously selected and are constantly checked, as is our entire production process.

Warranty Conditions for Escea Outdoor Wood Fires

This warranty is provided by Escea Limited (referred to in this document as Escea). The warranty applies from the date of purchase from or through an authorised Escea dealer.

Nature of Warranty

Subject to the exclusions in section 2 & 3, Escea may undertake to put right any defects in the Escea Outdoor Wood Fire products supplied by Escea for the periods specified below:

Parts	Parts and Labour Warranty
Basic firebox**, which is the steel body of the product, as well as any removable part, including: cooking plates, operation devices such as handles, adjustment levers	2 years*

* From date of purchase

** Failure is considered a physical crack or hole that stops the fire functioning as it is designed to.

Escea must pre-authorise all warranty work.

The benefits provided under this warranty are in addition to the consumer guarantees and any other statutory rights you may have under the consumer law and/or other applicable laws.

Warranty Exclusions

This warranty does not apply and will be void where:

The Escea Outdoor Fire Table is not installed in accordance with any building code and consent (if required).

The Escea Outdoor Fire Table has not been installed or operated in accordance to the Escea Outdoor Fire Table installation manual, in particular, defects, malfunctions, or failures caused by incorrect installation, normal wear and tear, misuse, neglect, lack of proper and regular maintenance, accidental damage, any other alteration, or failure to follow operating instructions in the installation manual or any misuse that causes an overfired situation resulting in heat damage.

The use of products that are not specified in accordance with the installation manual.

Repairs or modifications by persons not authorised by Escea, use of parts not supplied by Escea, or damage or other events which have occurred since the product left the control of Escea.

Any scratches, dints, finger print marks, and melted items that occurred after the arrival of the product to the Escea Dealer.

Discolouration of surface finishes caused by soiling by soot or built-in residues of burnt materials as well as visibly changed colour or other aspects due to thermal stress or overloading.

Changes in the interior / exterior surfaces of the house or fire (e.g. any staining or soot / smoke damage, cracking, discoloration or degradation of surfaces caused by thermal stress or overloading).

Damage caused by abnormally corrosive environments (e.g. sea salt corrosion).

Escea wood fires are coated with high temperature paint that may show signs of surface rust if exposed to moisture for an extended period of time. Any repair and replacements of parts that are subject to normal wear and tear expected with any outdoor fire product. Any rust damage discolouration or corrosion in any part of the fire over life of the fire is not covered by warranty.

Damage caused by water affecting the Escea outdoor wood fire.

This warranty does not cover paint blemishes or imperfections because of the uneven nature of high temperature paint. A spray can of touch up paint is available at a local paint merchant.

Subject to any statutory provisions to the contrary, at Escea's discretion, Escea's liability in respect of EP1350products that are found to have manufacturing defects will be limited to refunding, repairing, or replacing the defective products. The reinstatement and replacement of any affected outside wall, ceiling, or floor coverings, coatings, or claddings are not covered by warranty. Escea does not accept liability for consequential damage or any incidental expenses resulting directly or indirectly from any defect or breach of warranty, claims for damage to building or any other consequential loss.

Other Escea Outdoor Wood Fire Warranty Conditions

No dealer, distributor, or similar person has the authority to warrant Escea products beyond the terms contained in this warranty.

This warranty is automatically voided if the appliance's serial number has been removed or altered in anyway.

Any differences in fireplace appearance from Escea promotional images that is due to printing limitations, environmental factors, or wood variations are not a warranty issue.

Where you make a claim under this warranty, an authorised repairer may need to attend your premises to inspect the Escea product. Escea may charge you a service call fee if a repairer will be required to travel more than 30 km from the nearest service centre to your location. You can obtain details on the location of service centres and service call fees by visiting the Escea website or calling the customer care line below.

Warranty Claims

If you make a valid claim under warranty and none of the exclusions set out in section 2 and 3 apply, Escea will, at Escea's election either:

Repair the relevant part of the Escea product; or

Replace the relevant part of the Escea product with a product of identical specification (or where the product is superseded or no longer in stock, with a product of as close a specification as possible).

How to Make a Warranty Claim

To make a valid claim under this warranty, you must:

- Lodge the claim through the dealer who supplied the fire, as soon as you first become aware of the breakdown. The Escea Dealer will then follow Escea's warranty claim process.
- Provide the Escea product serial number.
- Provide reasonable proof of purchase for the Escea product.
- If required, provide access to the premises at which the Escea product is located (so it can be inspected).

Regions	Escea Distributors	Filing a Claim
Australia	Escea Australia PTY Ltd. P.O. Box 176 Pennant Hills, 1715, Sydney, NSW AU: 1800 460 832 or WA: 1800 730 140 www.escea.com.au	Visit the distributor website or call distributor directly.
New Zealand	Escea Ltd. 17 Carnforth Street Dunedin, 9018, New Zealand 0800 17 3000 www.escea.com	Contact the dealer you purchased the fire from

Contact the dealer you purchased the fire from to file a claim.

This document contains technical data subject to change without notice.